Installation instructions, TwinPegs for Triumph Tiger 900 Rally/ Rally Pro

Welcome as a TwinPegs rider!

Thank you for choosing to be one of the pioneers!

As all customers you are very important to me. Any issues/ questions, please send me an email at contact@twinpegs.no. I am certainly a motorcycle enthusiast myself, and I want you to have the same customer and product experience that I expect when buying parts for my own motorcycles.

This is individual, but as we all have learnt to ride our motorcycles on single footpegs, it may take some time to get used to the new opportunities provided by the new ergonomic concept TwinPegs. I am confident that your TwinPegs kit will serve you well for a very long time and give you great off-road riding experiences.

TwinPegs offer a lifetime warranty against material failure. The guarantee does not cover any damages to the rider, the rider gear, or to the motorcycle or aftermarket equipment assembled to the motorcycle claimed to be caused by TwinPegs. Nor does the guarantee cover wear and tear of the TwinPegs components after years of extensive use. Materials and design are chosen to give a very long lifetime. The guarantee does not cover damages caused by installation errors like ruined threads etc. Normal craftsmanship is required for installation.

No material failure has been reported so far since the first TwinPegs kit was delivered in 2019, nor any reported damages to rider, rider gear or motorcycle claimed to be caused by TwinPegs.

I would of course appreciate if you, after having gained some experience with TwinPegs, will post a review on www.twinpegs.no Thus not only helping me to be able to develop TwinPegs kits for more motorcycle models, but also helping other fellow enthusiasts to have the same improved ride experience as I am confident that you will have.

I would also appreciate if you post your experiences, pictures and travel stories on the TwinPegs Facebook site, and other relevant places.

Best regards, Kai Ingvald Flateland Inventor/ Designer/ Manager

Product details TwinPegs for Triumph Tiger 900 Rally/ Rally Pro

This is the first TwinPegs kit for a Triumph, that is a milestone for us. It has been requested by several, and it has been a long-time ambition to offer a TwinPegs kit for this exciting model. The interface on the Tiger 900 gave new possibilities for attaching the brackets, and make the brackets really compact. The TwinPegs design requirements for any kit is that it should be robust enough for racing, easy to install, and look good on the bike. By combining solutions developed for a range of earlier designed kits, and add a new one, we came up with a design that we are very satisfied with!

The benefits of being able to effortlessly shift weight towards the rear wheel by putting rider weight on the rear footpegs give you a new ride technique tool when climbing, accelerating and when

riding in sand or ruts. In addition to this, you have the benefit of saving energy and gaining control. Which in sum equals more fun and gained confidence while riding offroad.

The ergonomics and geometry of TwinPegs is developed via prototypes for enduro racing and rally racing. Just as in 2024, TwinPegs were raced both in Dakar Rally and Africa Eco Race 2025 and will be raced at both races in 2026. TwinPegs works!

However, TwinPegs have probably even more to offer to the common adventure rider.

The primary foot pegs are still the primary foot pegs when riding. The pivoting around the ordinary foot peg is shifted up to the ankle joint, when the foot is also resting on the rear footpeg.

The kit does not replace the existing primary foot pegs, it is an addition. The kit consists of brackets, rear foot pegs with return springs, and all attachment hardware.



The kit is compatible with most aftermarket primary foot pegs, unless they are much lower than original. If you choose the lowered height kit, aftermarket primary footpegs down to -25 mm can be used. But for my height, 189 cm, the original footpeg height is just fine. Extreme variations of pegs that are both wide, extremely lowered and extremely retracted may be difficult to accommodate. The picture above shows TwinPegs Triumph Tiger Rally standard height kit combined with original DDX footpegs. If you are going to use foot pegs with standard height, choose the kit with standard height rear foot pegs. If the foot pegs are lowered more than 5 -10 mm with respect to original footpegs, choose the kit with lowered rear foot pegs.

The height of the rear foot pegs is adjustable, so the kit can be configured according to the rider preferences, choice of boots, etc.

Using the grub screws in the rear foot pegs for added grip are optional, according to the rider preferences.
With heel support, softer boots may be used with success for increased comfort. But be aware that more comfortable boots offer less protection.

The need for lowered footpegs is also reduced by installing TwinPegs, as it cost less to stand with slightly bent knees when supported by TwinPegs. As the picture shows, the rear footpeg is quite

low, so most riders will like to use maybe 10 mm shim stack, as on the picture. This means that a 10 mm lowered primary footpegs will work fine with this kit for most riders except for those who like to ride with the heel very low.

The height of the rear foot pegs is adjustable, so the kit can be configured according to the rider preferences, choice of boots, etc.

Recommended tools

Allen key 8, 5, 4 and 2.5 mm. Spanner 12 mm. Small screwdriver for removing the C-clip that secures the original footpeg bolts. Preferably a torquewrench that cover torque 8 Nm, 17 Nm and up to 35 Nm. **Loctite 243**. Lubrication on the threads is a good idea.

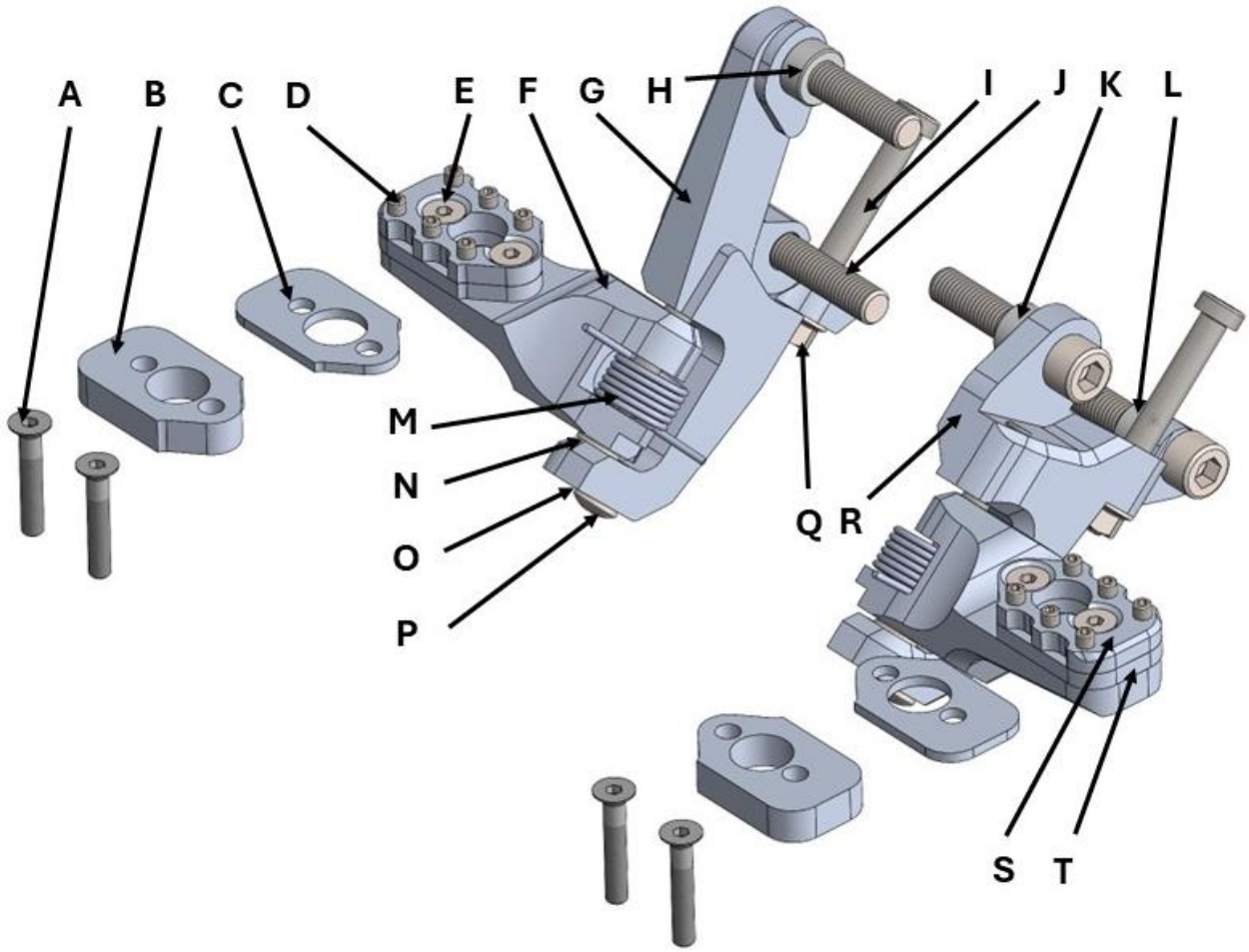

List of components

A: M6 x 35 countersunk (4 pcs)

B: 10 mm shims (2 pcs)

C: 3 mm shims (2 pcs)

D: Grub screw M6 x 10 (12 pcs)

E: M6 x 25 countersunk (4pcs)

F: Footpeg pair, 0 mm height

G: Triumph Tiger 900 Rally left side bracket (1pcs)

H: Spacer Ø16,5/Ø10,2 – Length 8.0 mm (1 pcs)

I: Primary footpeg pivot bolt M8 x 65 (2pcs)

J: M10x50 1.25 (4 pcs)

K: Spacer Ø16,5/Ø10,2 – Length 10,0 mm (1 pcs)

L: Spacer Ø16,5/Ø10,2 – Length 13,1 mm (1 pcs)

M: Return spring (2 pcs)

N: Flat washer Ø8,4 (2 pcs)

O : Primary footpeg pivot bolts M8 x 70 (2pcs)

P : Pivot bolt securing bolt M6 x 10 (2pcs)

Q: M8 Flange nut (2 pcs)

R: Triumph Tiger 900 Rally right side bracket (1pcs)

S: Footpeg surface (2 pcs)

T: 5 mm shims (2pcs)

Step 1 preparations

The picture above show the assembly of all parts listed in the parts list. Start by temporarily removing the primary footpegs. Pay attention to how the return springs are attached to the bike, so you get it back in the same position. Reinstall the primary footpegs with return springs by using bolts (**I**). Remove the two M10 x 30 mm allen key bolts that fasten the footpeg brackets to the frame on both sides. The footpeg brackets will then be loose, but that is all that happens, and it is not critical.

Step 2 Build right and left bracket footpeg assembly (Bracket + rear footpeg)

It is beneficial to preassemble the left and right footpeg assemblies before installing them on the bike**. Important: The flat washer (N) should be below the rear footpeg, separating the rear footpeg from the bracket. The air gap between the bracket and the top of the footpeg is intended.**

Make sure that the return springs (**M**) are installed like in the picture, squeeze them into position with your thumb with both ends engaging footpeg/ bracket edge, while pushing in the bolt (**O**). Bolt (**O**) torque is 17 Nm. Loctite if you want, but it makes disassembly harder. There have not been reported problems with dropped bolts. There is extra security in the design for preventing dropping bolts, the safety lock bolts (**P**). Don't forget to install these. No need for Loctite, the thread profile in these M6 holes is of self-lock type.

Adjustment of rear footpeg height must be done according to rider preferences until "sweet spot" of support and freedom is achieved. The ideal adjustment will be different for

different riders. For a low stack of shims use screws (**E**). For a tall stack of shims use screws (**A**).

Important note about adjustment! : Always loosen the grub screws (D) before the two countersunk M6 screws (E) or (A), as the grub screws (D) pretension the screws (E) and (A) The threads in the footpeg surface (L) are of a special "self lock" profile, that is resistant to coming loose. But they must be tightened.

Start with 5 mm shim as base setting. It is better to start low, and increase height if that feels right, than start high and get a "this is awkward"-feeling. If the rear footpegs feel intrusive, they are too high. If you must drop your heel uncomfortably low to find them, they are too low. Somewhere in between of these two extremes, most riders will be able to find a "sweet spot" where they after some time to get used to the new ergonomics, benefit significantly from having TwinPegs installed.

Step 4 Install left side bracket assembly

Lift bolt (**I**) until the end is at the level of the bottom of the lower footpeg lug. Install the two bolts (**J**) and spacer (**H**). It is recommende to install Bolts (**J**) with **Loctite 243**. Enter the threads but do not tighten. Enter bolt (**I**) in the threads of bracket (**G**). Handtight bolt (**I**). Handtight bolts (**J**). Pretension bolt (**I**) with **8 Nm**. Pretension bolts (**J**) with **30 Nm**.

The last operation is to tighten counter nut (**Q**) up to **17 Nm.**

Step 5 Install right side bracket assembly

Lift bolt (**I**) until the end is at the level of the bottom of the lower footpeg lug. Install the two bolts (**J**) and spacers (**K**) and (**L**). It is recommende to install Bolts (**J**) with **Loctite 243**. Enter the threads but do not tighten. Enter bolt (**I**) in the threads of bracket (**R**). Handtight bolt (**I**). Handtight bolts (**J**). Pretension bolt (**I**) with **8 Nm**. Pretension bolts (**J**) with **30 Nm**.

The last operation is to tighten counter nut (**Q**) up to **17 Nm.**

Important note about adjustment of rear footpeg height!

Always loosen the six small M6 x 10 grub screws **D** before attempting to loosen the two M6 screws **A** or **E** that secure the footpeg surface and shims stack! These grub screws are pretensioning the two M6 bolts, preventing them from coming loose.

When satisfied with the adjustment, it is advised to secure these grub screws with Loctite.

The purpose of the grub screws is to increase safety during offroad riding. Using them is of course not mandatory. Set it up like you prefer, for your use.

Have fun and stay safe! And when appropriate; Ride faster further!