Installation instructions, TwinPegs for Suzuki VStrom 800 DE

Welcome as a TwinPegs rider!

Thank you for choosing to be one of the pioneers!

As all customers you are very important to us. Any issues/ questions, please send me an email at contact@twinpegs.no. I am certainly a motorcycle enthusiast myself, and I want you to have the same customer and product experience that I expect when buying parts for my own motorcycles.

This is individual, but as we all have learnt to ride our motorcycles on single footpegs, it may take some time to get used to the new opportunities provided by the new ergonomic concept TwinPegs. I am confident that your TwinPegs kit will serve you well for a very long time and give you great off-road riding experiences.

TwinPegs offer a lifetime warranty against material failure. The guarantee does not cover any damages to the rider, the rider gear, or to the motorcycle or aftermarket equipment assembled to the motorcycle claimed to be caused by TwinPegs. Nor does the guarantee cover wear and tear of the TwinPegs components after years of extensive use. Materials and design are chosen to give a very long lifetime. The guarantee does not cover damages caused by installation errors like ruined threads etc. Normal craftsmanship is required for installation.

No material failure has been reported so far since the first TwinPegs kit was delivered in 2019, nor any reported damages to rider, rider gear or motorcycle claimed to be caused by TwinPegs.

I would of course appreciate if you, after having gained some experience with TwinPegs, will post a review on www.twinpegs.no Thus not only helping me to be able to develop TwinPegs kits for more motorcycle models, but also helping other fellow enthusiasts to have the same improved ride experience as I am confident that you will have.

I would also appreciate if you post your experiences, pictures and travel stories on the TwinPegs Facebook site, and other relevant places.

Best regards, Kai Ingvald Flateland Inventor/ Designer/ Manager

Product details TwinPegs for Suzuki VStrom 800 DE

This is a milestone, the first TwinPegs kit for a Suzuki! The interface for installing TwinPegs brackets was OK. There are 8 years of TwinPegs design experience incorporated in this kit, from kits for adventure and racing. The TwinPegs design requirements for any kit is that it should be robust enough for racing, easy to install, and look good on the bike. By combining solutions developed for a range of earlier designed kits, we came up with a design that we are very satisfied with.

The benefits of being able to effortlessly shift weight towards the rear wheel by putting rider weight on the rear footpegs give you a new ride technique tool when climbing, accelerating and when riding in sand or ruts. In addition to this, you have the benefit of saving energy and gaining control. Which in sum equals more fun and gained confidence while riding offroad.

The ergonomics and geometry of TwinPegs is developed via prototypes for enduro racing and rally racing. Just as in 2024, TwinPegs were raced both in Dakar Rally and Africa Eco Race 2025, and waas raced at both races in 2026. TwinPegs works!

However, TwinPegs have probably even more to offer to the common adventure rider.

The primary foot pegs are still the primary foot pegs when riding. The pivoting around the ordinary foot peg is shifted up to the ankle joint, when the foot is also resting on the rear footpeg.

The kit does not replace the existing primary footpegs, it is an addition. The kit consists of brackets, rear footpegs with return springs, and all attachment hardware.

The kit is compatible with most aftermarket primary footpegs. The height of the rear footpegs is adjustable by adding shims, so the kit can be configured according to the rider preferences, choice of boots, etc.



The standard height kit come with rear footpegs matched to the height of the OEM primary footpegs. There are also holes for grub screws cut directly in the rear footpeg base part. Which means that if a lower primary footpeg is desired, it is a possibility to skip the loose footpeg surface. This means that down to 12,5 mm (1/2'') lowered primary footpegs will work fine with this kit for most riders except for those who like to ride with the heel very low.

For lower footpegs, the lowered height kit should be chosen. This kit have 20 mm lower rear footpegs.

Using the grub screws in the rear foot pegs for added grip are optional, according to the rider preferences.

With heel support, softer boots may be used with success for increased comfort. But be aware that more comfortable boots offer less protection.

Recommended tools

Allen key 5, 4 and 2.5 mm. Spanner 13 mm. Small screwdriver and tong for removing the cotter pins that secures the original footpeg bolts. Preferably a torquewrench that cover torque 8 Nm, 17 Nm. Lubrication on the threads is a good idea. Loctite 243 can be useful.

List of components

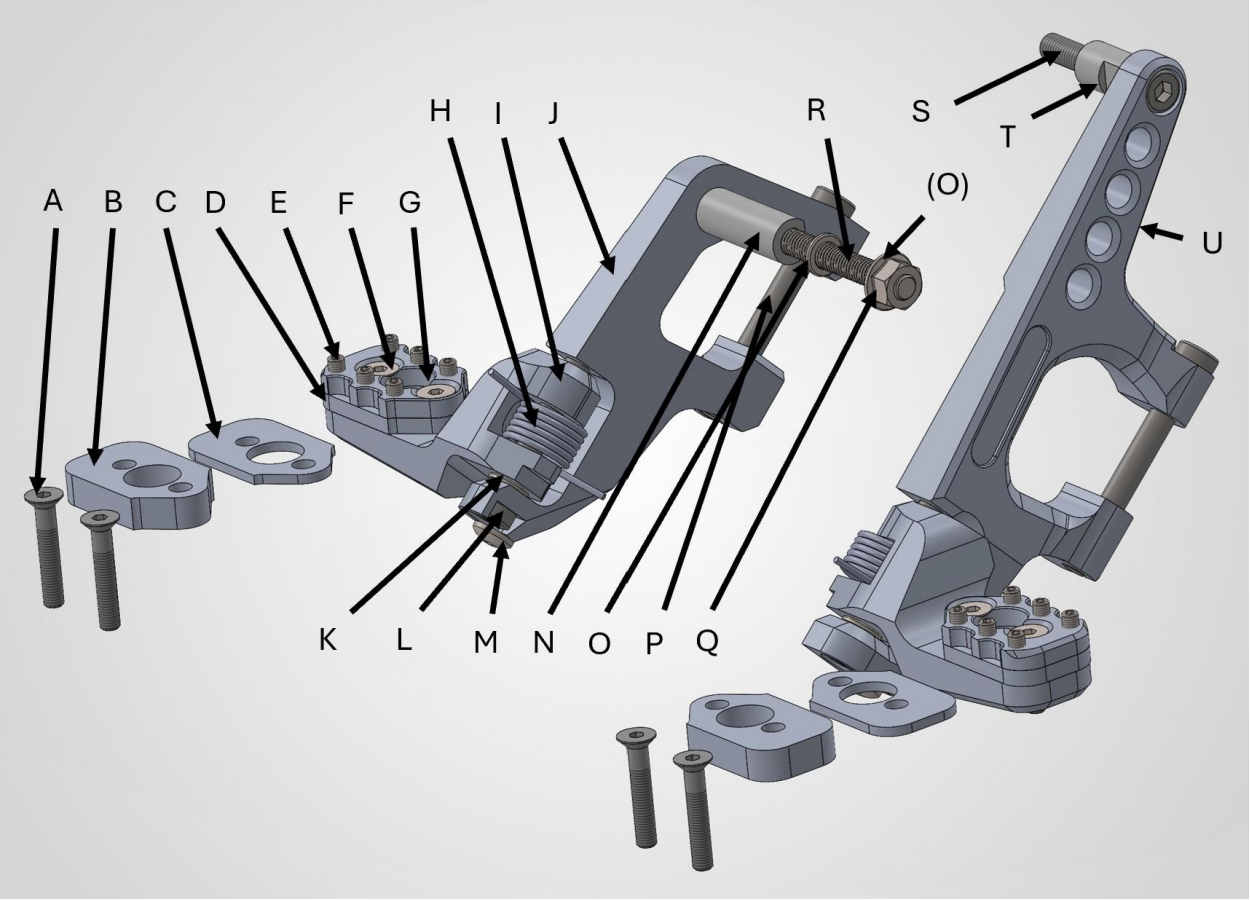

A: M6 x 35 (4 pcs)

B: 10 mm shims (2 pcs) Attachment spacer (2 pcs)

C: 3 mm shims (2 pcs)

D: 5 mm shims (2pcs)

E: Grub screw M6 x 10 (12 pcs)

F: M6 x 25 countersunk (4pcs)

G: Footpeg surface (2 pcs)

H: Return spring (2 pcs)

I: Footpeg pair, -40 height

J: Suzuki VStrom 800 DE (1pcs) left bracket.

K: Flat washer Ø 8,5 mm (2 pcs)

L: Rear footpeg pivot bolts M8 x 70 (2pcs)

M: Pivot bolt securing bolt M6 x 10 (2pcs)

N: Spacer sleeve Suzuki VStrom 800 DE left 36,9 mm (1 pcs)

O : Flat washer Ø 8,5 mm (2 pcs) (Installed between structure and chain roller, and between chain roller and nut in the end

P : Primary footpeg pivot bolt stainless M8 x 70 (2 pcs)

Q: M8 Flange nut (2 pcs)

R: Button head bolt M8 x 100 (1 pcs)

S: M8 x 50 (1 pcs)

T: Spacer sleeve Suzuki VStrom 800 DE right 22,6 mm (1 pcs)

U: Suzuki VStrom 800 DE (1pcs) right bracket.

Step 1 preparations

The picture above show the assembly of all parts listed in the parts list. Start by temporarily removing the primary footpegs. Pay attention to how the return springs are attached to the bike, so you get it back in the same position.

Disassemble the chain roller.

Step 2 Build right and left bracket footpeg assembly (Bracket + rear footpeg)

It is beneficial to preassemble the left and right footpeg assemblies before installing them on the bike**. Important: The flat washer (K) should be below the rear footpeg, separating the rear footpeg from the bracket. The air gap between the bracket and the top of the footpeg is intended.**

Make sure that the return springs (**H**) are installed like in the picture, squeeze them into position with your thumb with both ends engaging footpeg/ bracket edge, while pushing in the bolt (**L**). Bolt (**L**) torque is 17 Nm. Loctite if you want, but it makes disassembly harder. There have not been reported problems with dropped bolts. There is extra security in the design for preventing dropping bolts, the safety lock bolts (**M**). Don't forget to install these. No need for Loctite, the thread profile in these M6 holes is of self-lock type.

Adjustment of rear footpeg height must be done according to rider preferences until "the sweet spot" between support and freedom is achieved. The ideal adjustment will be different for different riders. For a low stack of shims use screws (**F**). For a tall stack of shims use screws (**A**).

Important note about adjustment! : Always loosen the grub screws (E) before the two countersunk M6 screws (F) or (A), as the grub screws (E) pretension the screws (F) or (A) The threads in the footpeg surface (L) are of a special "self lock" profile, that is resistant to coming loose. But grub screws (E) must be tightened.

Start with 3 mm shim as base setting. It is better to start low, and increase height if that feels right, than start high and get a "this is awkward"-feeling. If the rear footpegs feel intrusive, they are too high. If you must drop your heel uncomfortably low to find them, they are too low. Somewhere in between of these two extremes, most riders will be able to find a "sweet spot" where they after some time to get used to the new ergonomics, benefit significantly from having TwinPegs installed. When the final adjustment is found, it can be wise to secure these grub screws with Loctite

Step 3 Install left side bracket assembly

Put bolt **(R)** in the left bracket assembly, and place sleeve **(N)** in position. The cut out of the sleeve should point in. Place the left bracket assembly in position, and start screwing in bolt **(R)**. When it has protruded the structure, place the first washer **(O)** on the bolt. This is similar to washer **(K)**. Keep screwing in, and put the original chain roller in place before the bolt has protruded too far. When the bolt is almost in place, install the secod washer **(O)** and nut **(Q)**. There is no need for Loctite on this nut, these nuts are offshore spec with "self lock" thread profile for resisting loosening due to vibration.

Place the OEM primary footpegs in the correct position, and slide down bolt **(P)** and install the OEM primary footpeg return spring. Enter bolt **(P)** and handtighten it.

Push down on the rear footpeg (I) to take up any slack. Tighten bolt **(R)** up to **17 Nm**. Tighten bolt **(P)** with **17 Nm** .

Step 4 Install right side bracket

This is basically similar to the installation on the left side. Put bolt **(S)** in the right bracket assembly, and place sleeve **(T)** in position. Bolt **(S)** can preferably be installed with Loctite 243. The cutout in the sleeve is to solve the clearance issue with the plastic cover for the brake cylinder. Place the right bracket assembly in position, and start screw in bolt **(S)** until it is almost in. Place the OEM primary footpegs in the correct position, and slide down bolt **(P)** and install the OEM primary footpeg return spring. Enter bolt **(P)** and handtighten it.

Push down on the rear footpeg (I) to take up any slack. Tighten bolt **(R)** up to **17 Nm**. Tighten bolt **(P)** with **17 Nm** .

Important note about adjustment of rear footpeg height!

Always loosen the six small M6 x 10 grub screws **E** before attempting to loosen the two M6 screws (**A)** or **(F)** that secure the footpeg surface and shims stack! These grub screws are pretensioning the two M6 bolts, preventing them from coming loose.

When satisfied with the adjustment, it is advised to secure these grub screws with Loctite 243.

The purpose of the grub screws is to increase safety during offroad riding. Using them is of course not mandatory. Set it up like you prefer, for your use.

Have fun and stay safe! And when appropriate; Ride faster further!