TwinPegs for KTM/Husqvarna/Gas Gas enduro bikes assembly instructions

Welcome as a customer of TwinPegs, and thank you for choosing to be one of the TwinPegs pioneers!

As all customers you are very important to me. Any issues/ questions, please send me an email at contact@twinpegs.no. I am certainly a motorcycle enthusiast myself, and I want you to have the same customer and product experience that I expect when buying parts for my own motorcycles.

This is individual, but as we all have learnt to ride our motorcycles on single footpegs, it may take some time to get used to the new opportunities provided by the new ergonomic concept TwinPegs. I am confident that your TwinPegs kit will serve you well for a very long time, and give you great off-road riding experiences.

TwinPegs offer a five-year warranty. The guarantee does not cover any damages to the rider, the rider gear, or to the motorcycle or aftermarket equipment assembled to the motorcycle claimed to be caused by the use of TwinPegs. Nor wear and tear of the TwinPegs components after years of extensive use. Materials and design is chosen to give a very long lifetime. The guarantee does not cover damages caused by accidents or installation errors like ruined threads etc. Normal craftsmanship is required for installation.

No warranty claims have been issued so far since the first product was delivered in 2019, nor any reported damages to rider, rider gear or motorcycle claimed to be caused by TwinPegs.

I would of course appreciate if you, after having gained some experience with TwinPegs, will post a review on www.twinpegs.no Thus not only helping me to be able to develop TwinPegs kits for more motorcycle models, but also helping other fellow enthusiasts to have the same improved ride experience as I am confident that you will have.

I would also appreciate if you post experiences, pictures and travel stories on the TwinPegs Facebook site.

Best regards, Kai Ingvald Flateland Inventor/ Designer/ Manager

Important notes!

This kit is designed to be used with original height footpegs, as they will give the full adjustment range available on the rear footpeg. The adjustment range is important to cover all users of this kit, everyone have their own preferences. Typically will gravel road riders adjust the rear footpeg higher than riders who use the kit for extreme enduro. With the rear footpegs set too high, the rear footpegs may feel intrusive and disturbing. Set too low, they are more difficult to access and contribute less to improving the ride experience. Somewhere in between is the sweet spot! By using the kit together with lowered footpegs this may still work, but the adjustment range will be reduced with the height reduction of the primary footpegs.

Required tools: flat screwdriver, 2.5, 4 and 7 mm Allen keys, (Torx 45 can be used instead of 7 mm Allen key) Torx 40, two 13 mm sockets with ratchet/ fixed arm, a pair of pliers, and preferably a torque wrench that cover 15 Nm-30Nm.

For easier disassembly, if the kit is going to be transferred to another bike, it is recommended with lubrication of threads prior to assembly. Lubricate the threads in the brackets and footpegs, not the bolts itself. This ensures lubrication where it is desired.

TwinPegs for KTM/Husqvarna/Gas Gas enduro bikes assembly instructions

TwinPegs components

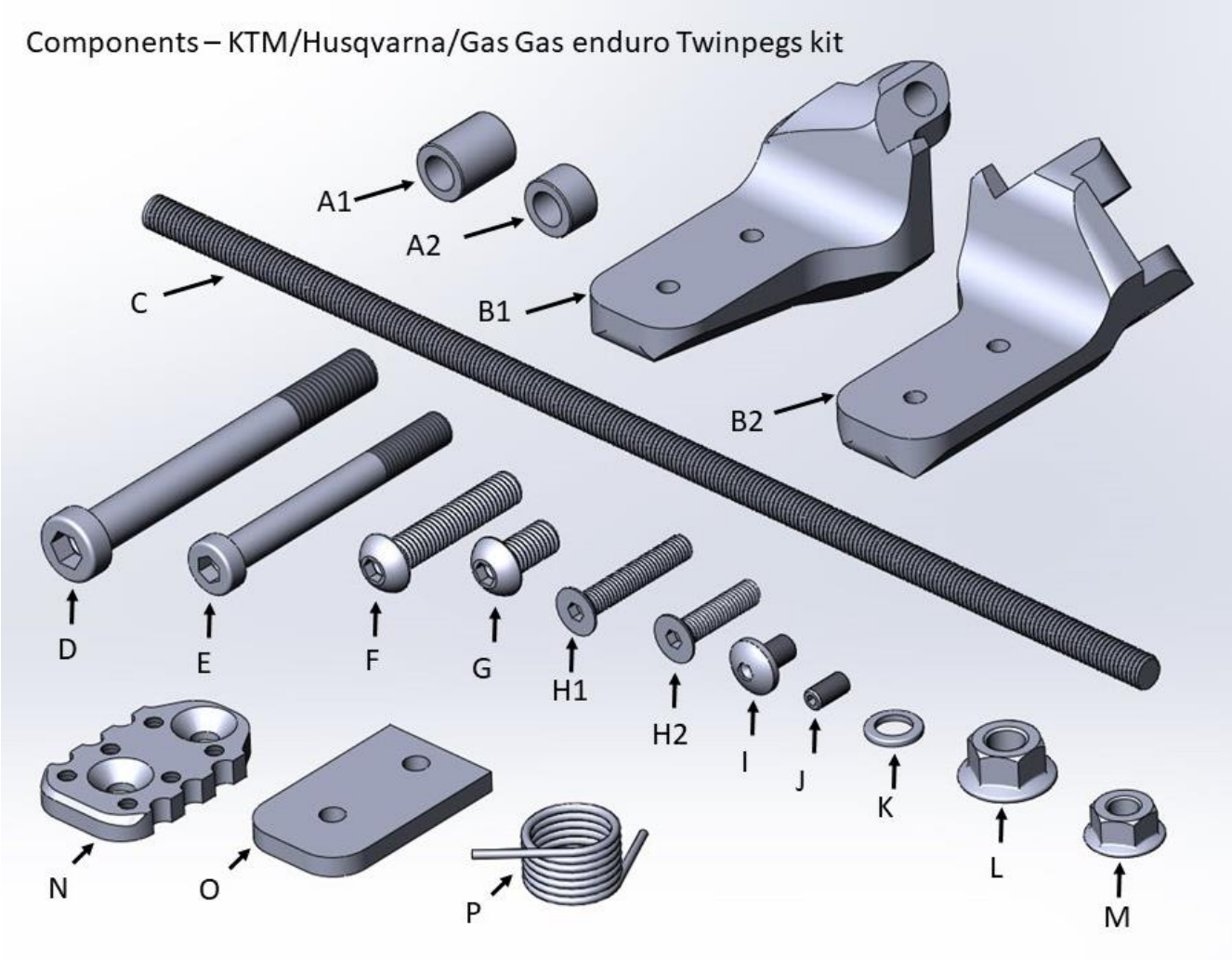

A1: Right spacer 17,4 mm (1 pcs) **A2:** Left spacer 8,8 mm (1 pcs) **B1:** Right footpeg **(**1 pcs)

B2: Left footpeg (1 pcs) **C:** Threaded bar M8 (1 pcs) **D:** Primary footpeg bolt M10 x 90 (2 pcs)

E: Rear footpeg bolt M8 x 70 (2 pcs) **F:** Sidestand bolt M8 x 40 (1 pcs) **G**: Footpeg camber bolt M8 x 16 (2 pcs)

H1: Footpeg surface bolt M6 x 35 (4 pcs) **H2:** Footpeg surface bolt M6 x 25 (4 pcs)

I: Securing bolt M6 x 10 (1 pcs) **J**: Grub screw M5 x 10 (13 pcs) **K**: Flat washer M8 (6 pcs)

L: Flange lock nut M10 (2pcs) **M**: Flange lock nut M8 (2 pcs) **N** : Footpeg surface (2pcs)

O: Shims (2 pcs 2 mm, 2 pcs 5 mm, 2 pcs 10 mm) **M**: Return spring (2 pcs)

TwinPegs for KTM/Husqvarna/Gas Gas enduro bikes assembly instructions

General assembly overview

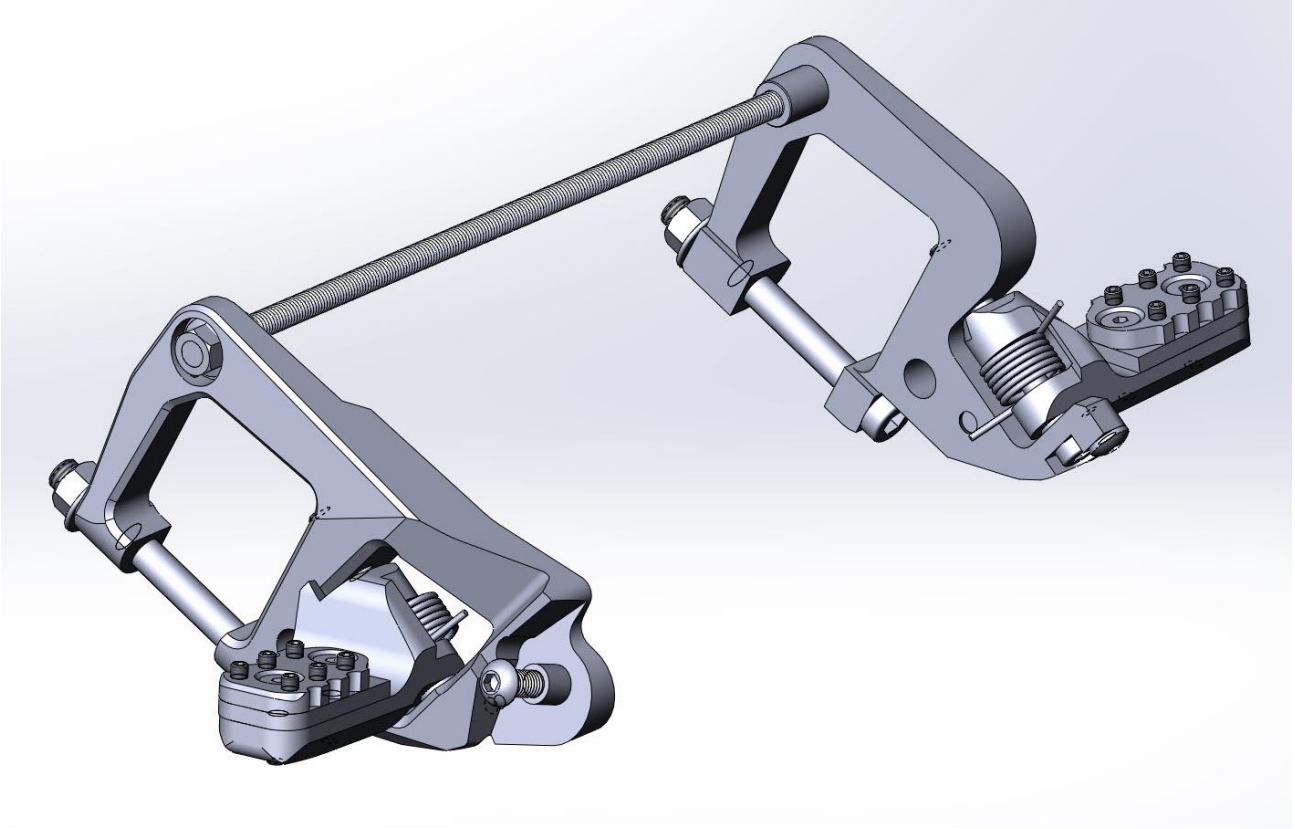

Installation steps

1: Remove the original sidestand by removing the bolt holding it in position. Let it hang connected in the return springs, place it out of the way.



2: The original plastic frame guards can be used together with this kit, but they must be modified. A hole must be made so the threaded bar that runs through the hollow swing axle can protrude through the plastic frame guard. The spacer is Ø14, so the hole must be minimum Ø15. You may cut a hole quick and dirty with a knife. If you want this to be accurate for esthetic reasons, here is a proposal : Remove right side frame guard. Have a wooden drill minimum 330 mm long, Ø9-10 mm. Run this drill trough the swingarm axle towards the left side. Use this drill to mark the center of the hole, by letting the tip protrude the plastic frame guard. Use a 15 mm or bigger drill, and drill carefully a hole in the right frame guard from the outside. Remove the left side frame guard, reinstall the right side frame guard, and repeat the process for the right side.

TwinPegs for KTM/Husqvarna/Gas Gas enduro bikes assembly instructions



3: Pretension and secure the original footpeg return springs by using the zip ties (a screwdriver and a pair of pliers are useful). Remove the original footpegs. Remove the footpegs.

4: Put in position right bracket, primary footpeg and pretensioned return spring. Use bolt **D** to connect all parts, bolt **D** will be the new footpeg pivot bolt. Screw bolt **D** allt the way in, without tightening it. Tilt the bracket outwards. Remove the zip tie on the return spring. Install the modified plastic frame guard on the right side. Do the same procedure with all the components on the left side.

5: Install the threaded bar **C** in the hollow swingarm axle. Put the spacers in position, the long **A1** on the right side, the short **A2** on the left side. Fold in the brackets, until they are in position and the threaded bar **C** protrudes them equally on each side. Install locknuts **M** and tighten them, pay attention so the threaded bar is protruding equally on each side. Maximum torque 17 Nm. These flange nuts have a special self lock thread profile, so they are secured against vibration.

6: Tighten bolts **D**. They are pinching together the bracket, and should not be tightened very hard. If tightened to hard, the primary footpeg will be jammed. If so, back off the torque, so the footpeg pivots freely. Install and tighten locknuts **L**. Maximum torque 28 Nm. These flange nuts have a special self lock thread profile, so they are secured against vibration.

7: Install the camber adjustments screws **G** on right and left footpeg. , Adjust rear footpeg camber by adding washers **K** under the screw head. Two washers give close to original camber. But adding camber also lifts the rear footpeg. If the bolt is skipped, this will give zero camber, and the lowest possible rear footpeg.

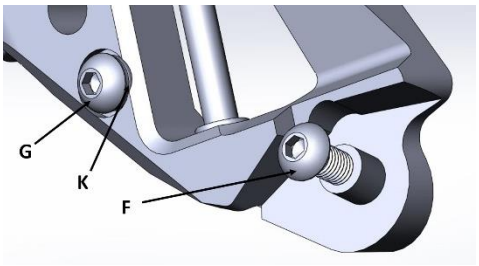

8: Install the sidestand. This is the most tricky and critical operation, be careful so the threads in the bracket is not overloaded and damaged during installation. Install the original sheet metal part from the original sidestand bracket on the TwinPegs bracket. The original sidestand bolt should not be used, it is very important to use bolt **F** that come in the kit. (Buttonhead bolt shown in illustrations is replaced with the countersunk bolt F M8 x 40) You have to decide whether you want to keep the automatic sidestand retract feature, or not. If you skip the sleeve shown in the picture, the sidestand will not retract automatically when the sidestand is lifted off the ground. Keep the sidestand return springs connected in both ends. Use both hands, and put the sidestand in correct position on the sleeve on the bracket. Apparently it will now be in the correct position, but the tensioned return spring is pulling the sidestand out of neutral position, and the new sidestand bolt **F** is thus not easy to enter. Don't enter it with brute torque, that will potentially damage the threads. The sidestand bolt should enter the threads in the bracket effortlessly, and it should be possible to install it with your fingers. To achieve this, the sidestand must be lined up with the bolt hole. Grab the sidestand in lifted position, and twist/ bend it until





the holes line up, so the bolt **F** can be entered and installed with your fingers. Tighten up the bolt **F** to maximum 17 Nm. The threads have a special self lock profile, for extra safety.

9: Install the left rear footpeg **B2**, with rear footpeg pivot bolts **E** and return springs **P**. It is important that the washer **K** is placed under the footpeg, as shown. The air gap between the top of the footpeg and the bracket is intended. These design features are there to ensure smooth operation of the footpeg fold back safety feature. Torque maximum 17 Nm. Don't forget to install the safety bolt for preventing this bolt from coming loose, the grub screw **J**.

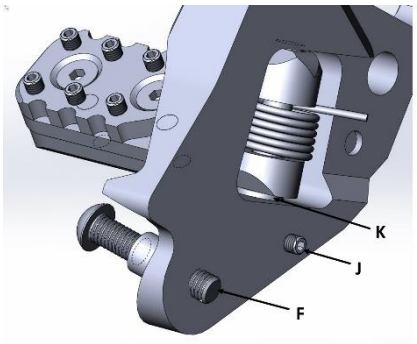

10: Install the right rear footpeg **B1**, with rear footpeg pivot bolts **E** and return springs **P**. It is important that the washer **K** is placed under the footpeg, as shown. The air gap between the top of the footpeg and the bracket is intended. These design features are there to ensure smooth operation of the footpeg fold back safety feature. Torque maximum 17 Nm. Install the securing bolt **I**, to prevent bolts E from dropping if they should come loose. The threads for these securing bolts are of self-lock type, no Loctite needed.

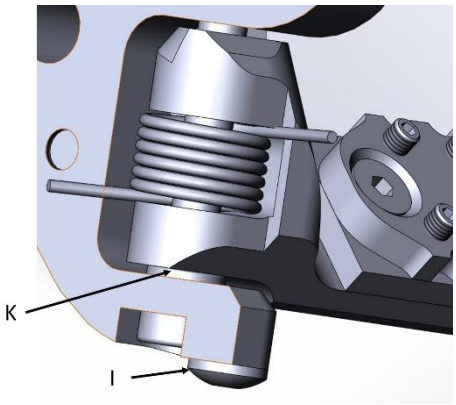

11: Install the rear footpeg surfaces **N** with countersunk bolts **H1/H2**. Adjust the rear footpeg assembly height according to personal preferences with shims **O**. If TwinPegs feels slightly intrusive, the rear footpegs are probably adjusted too high. Two different lengths of bolts **H** are supplied, to cover different shim stack heights. When finished adjusting, the end of the M6 countersunk screws may be cut off. **Warning! The M6 countersunk bolts do not need a lot of torque to keep pretension, due to the chosen self lock thread profile. So no Loctite.** With TwinPegs, the key source to boot grip is still the main footpegs. So using the grub screws **J** for added boot grip are of course optional. For most adventure riding, they are probably not necessary. When "normally tigthened", the friction when they dig into the underlying surface should keep them tight.

Warning, broken bolt potential! : The pretension of the six grub screws E add pretension to the countersunk screws. Thus always release the grub screws before trying to release the M6 countersunk bolts. Otherwise disassembly of the M6 countersunk bolts will be difficult, and damaged bolt heads may occur.

You are now ready to enjoy your motorcycle even more offroad, have fun and safe rides!

And when appropriate; **Ride faster further!**