TwinPegs for KTM 790/890/ Husqvarna 901 installation instructions

Welcome as a customer of TwinPegs, and thank you for choosing to be one of the pioneers!

As all customers you are very important to me. Any issues/ questions, please send me an email at contact@twinpegs.no. I am certainly a motorcycle enthusiast myself, and I want you to have the same customer and product experience that I expect when buying parts for my own motorcycles.

This is individual, but as we all have learnt to ride our motorcycles on single footpegs, it may take some time to get used to the new opportunities provided by the new ergonomic concept TwinPegs. I am confident that your TwinPegs kit will serve you well for a very long time, and give you great off-road riding experiences.

TwinPegs offer a five-year warranty. The guarantee does not cover any damages to the rider, the rider gear, or to the motorcycle or aftermarket equipment assembled to the motorcycle claimed to be caused by the use of TwinPegs. Nor wear and tear of the TwinPegs components after years of extensive use. Materials and design is chosen to give a very long lifetime. The guarantee does not cover damages caused by installation errors like ruined threads etc. Normal craftsmanship is required for installation.

No warranty claims have been issued so far since the first product was delivered in 2019, nor any reported damages to rider, rider gear or motorcycle claimed to be caused by TwinPegs.

I would of course appreciate if you, after having gained some experience with TwinPegs, will post a review on www.twinpegs.no Thus not only helping me to be able to develop TwinPegs kits for more motorcycle models, but also helping other fellow enthusiasts to have the same improved ride experience as I am confident that you will have.

I would also appreciate if you post experiences, pictures and travel stories on the TwinPegs Facebook site.

Best regards, Kai Ingvald Flateland Inventor/ Designer/ Manager

Original footpegs and most aftermarket standard and lowered pegs down to -30 mm can be used together with this kit. The only exception I am aware of so far, is the extreme version of Bosley pegs. Lowered 30 mm/ retracted 20 mm. If questions, please send email to contact@twinpegs.no. Required tools: flat screwdriver, 2.5, 4 and 7 mm Allen keys, (Torx 45 can be used instead of 7 mm Allen key) Torx 40, some 5 mm zip ties, Loctite 243, a pair of pliers, and preferably a torque wrench that cover 7 Nm-30Nm.

For easier disassembly, if the kit is going to be transferred to another bike, it is recommended with lubrication of threads prior to assembly. Lubricate the threads in the brackets and footpegs, not the bolts itself. This ensures lubrication where it is desired.

Installation steps

1: Pretension and secure the original footpeg return springs by using the zip ties (a screwdriver and a pair of pliers are useful). Remove the original footpegs. Keep the springs pretensioned until all installation is finished. Cutting and removing the zip tie should be the very last step of the installation.



TwinPegs for KTM 790/890/ Husqvarna 901 installation instructions

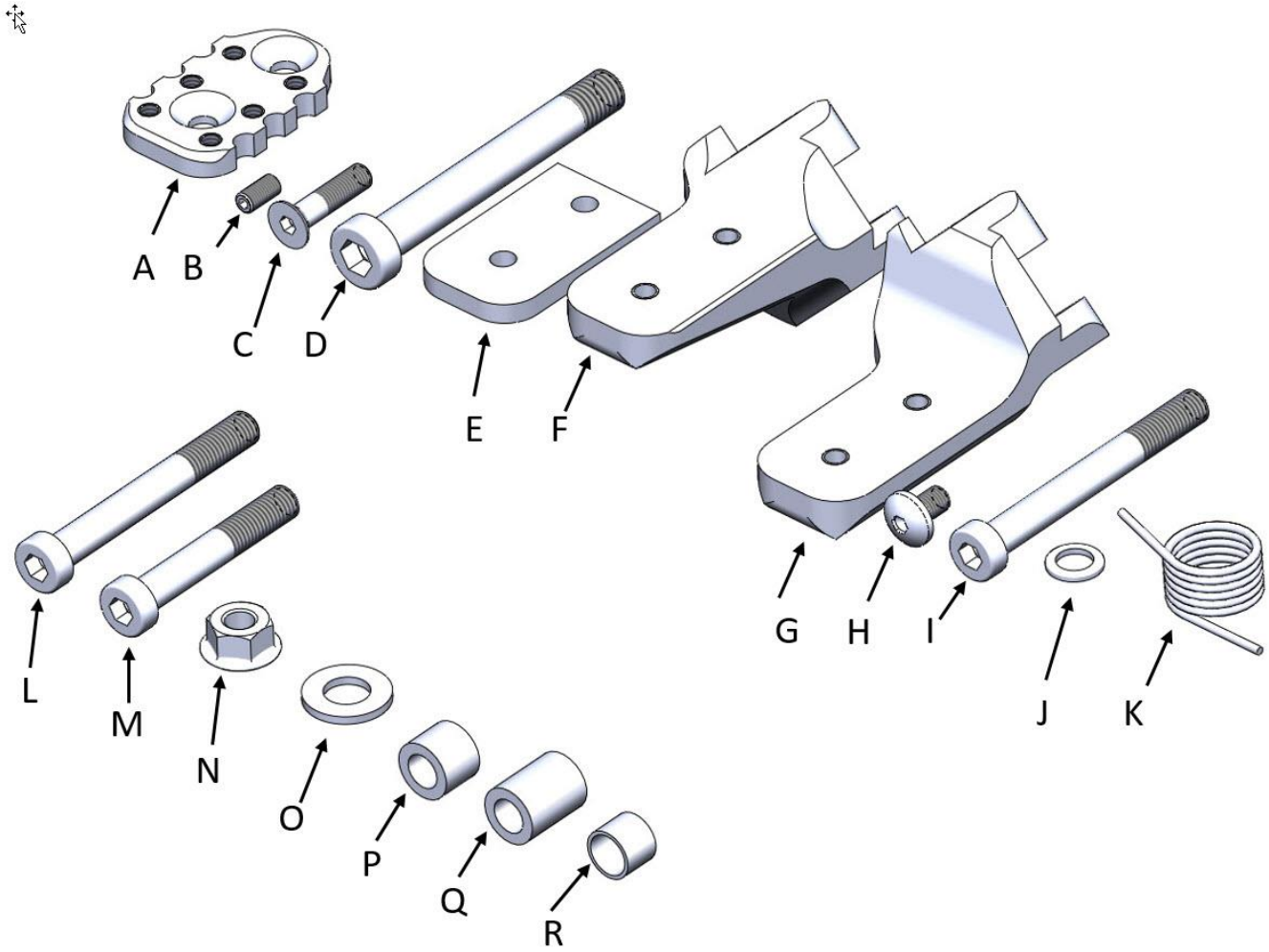

A : Footpeg surface (2 pcs) B : Grub screw (12pcs) C : Bolts for fastening footpeg surface (4 pcs) M6 x 25 + (4 pcs) M6 x 35 D : Primary footpeg bolt M10 (2pcs) E : Footpeg shims (2 pcs 10 mm, 2 pcs 5 mm, 2 pcs 3 mm) F : Rear footpegs standard height (2 pcs L + R if the kit for standard height footpegs is ordered) G : Rear footpegs 20 mm lowered height (2 pcs L + R if the kit for 20 mm lowered height footpes) H : M6 x 10 securing bolts (4 pcs) I : Rear footpeg bolts M8 x 70 (2 pcs) J : M8 washer (2 pcs) K : Return spring (2 pcs) L : M8 x 65 (1 pcs) M : M8 x 50 (1 pcs) N : M8 flange lock nut (2 pcs) O : M10 washer (4 pcs) P : Left spacer sleeve 11 mm (1 pcs) Q : Right spacer sleeve 18 mm (1 pcs) R : Spacer sleeve 9,3 mm (2 pcs)

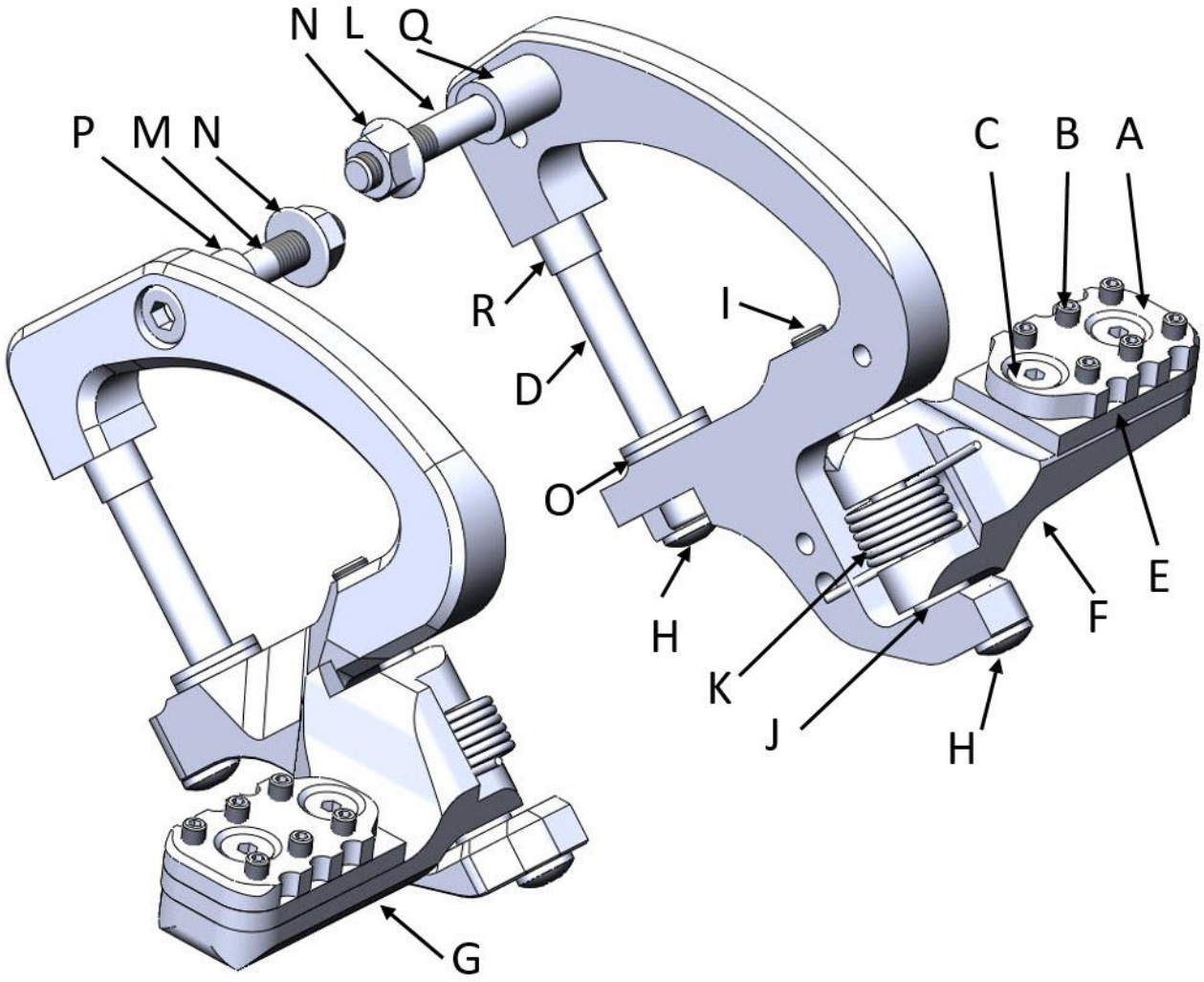

2: Pre assemble the components for each side. Install the rear footpegs (**F** or **G**, depending on what kit is ordered **)**, return spring (**K)**, footpeg pivot bolt (**I)**, and M8 washer (**J)** in both brackets. **Important, see picture : The flat washer (J) should be installed below the rear footpeg. The air gap between the bracket and the top of the footpeg is intended.** These design features are there to ensure smooth operation of the footpeg fold back safety feature.

The M8 bolt (**I**) should be secured with Loctite 243 and set with torque 17 Nm. The M6 pan head bolts **(H)** are installed as an extra safety for dropping the pivot bolt. No Loctite required for the bolts **(H)**, due to the use of self lock thread profile.

3: The original pivot bolts for the gear lever and rear brake pedal should be disassembled. They will be replaced by the bolts **(M)** and **(L)**. Beware that despite the length of bolt **(L)**, there is no risk of conflict between the swingarm and the bolt.

Place the spacer sleeves **(R)** in the machined holes on top of the existing footpeg brackets. Place two washers **(O)** between the TwinPegs bracket and existing footpeg bracket. Install the TwinPegs brackets. Re-install the footpegs and original return spring by installing the primary footpeg bolts **(D)** from the kit. Use Loctite 243 to secure it, but **do not tighten the bolts (D) yet**.

The spacer sleeves **(P)** and **(Q)** should be placed between the brackets and the frame structure. Reinstall the gear lever and rear brake lever, replaced the original bolts by the bolts **(M)** and **(L)**. Use the stainless nuts with self lock threads **(N)** from the kit, for securing these bolts. Tighten the bolts lightly, until the slack is taken.

Push the rear end of the bracket down to take up any slack in the load direction, and tighten the M10 main footpeg bolt with 20 Nm max. Over tensioning these bolts will lead to excessive load on the eisting footpeg brackets. Use Loctite 243 on the M10 bolts. Then tighten the M8 torx bolts that is replacing the gear lever/ brake pedal pivot bolts. The special nuts **(N)** with self lock thread profile is chosen for maximum safety. These nuts are used for securing vibration prone equipment in the Norwegian oil and gas industry. Loctite 243 can be used, for added safety. The possible downside of using Loctite is more difficult disassembly. Maximum torque 25 Nm for bolts **(N)**. The M6 pan head bolts **(H)** are installed as an extra safety for dropping the pivot bolt. No Loctite required for the bolts **(H)**, due to the use of self lock thread profile. Maximum torque on bolts **(H)** are 7 Nm. Loctite 243 on these bolts are not recommended.

4: Adjust the rear footpeg assembly height according to personal preferences with shims. When finished ajusting, the end of the M6 countersunk screws may be cut off. **Warning! The M6 countersunk bolts do not need a lot of torque to keep pretension, due to the chosen self lock thread profile. So no Loctite.** With TwinPegs, the key source to boot grip is still the main footpegs. So using the M5 Grub screws **(B)** are of course optional. When “normally tigthened”, the friction when they dig into the underlying surface should keep them tight. **Warning! The pretension of the six M5 grub screws (B) add pretension to the countersunk screws. Thus always release the grub screws before trying to release the M6 countersunk bolts. Otherwis disassembly of the M6 countersunk bolts will be difficult, and damaged bolt heads may occur.**

5: Clean and dry the sidestand. Mark where the sidestand will be close to the bracket, see picture. The self vulcanizing silicone tape strip in the kit is supposed to be wrapped around the sidestand, to avoid metal to metal contact. Remove the protective plastic, and secure the end of the tape on the sidestand. Stretch the tape while wrapping it, this will cause the tape to fuse and adhere. Wrap the tape with full overlap, and stretch to twice the length, for effective fusing.



You are now ready to enjoy your motorcycle even more, have safe and fun rides offroad! And when appropriate; **Ride faster further!**