Installation instructions, TwinPegs for BMW R 1300 GS/GSA

Welcome as a TwinPegs rider!

Thank you for choosing to be one of the pioneers!

As all customers you are very important to me. Any issues/ questions, please send me an email at contact@twinpegs.no. I am certainly a motorcycle enthusiast myself, and I want you to have the same customer and product experience that I expect when buying parts for my own motorcycles.

This is individual, but as we all have learnt to ride our motorcycles on single footpegs, it may take some time to get used to the new opportunities provided by the new ergonomic concept TwinPegs. I am confident that your TwinPegs kit will serve you well for a very long time and give you great off-road riding experiences.

TwinPegs offer a lifetime warranty against material failure. The guarantee does not cover any damages to the rider, the rider gear, or to the motorcycle or aftermarket equipment assembled to the motorcycle claimed to be caused by TwinPegs. Nor does the guarantee cover wear and tear of the TwinPegs components after years of extensive use. Materials and design are chosen to give a very long lifetime. The guarantee does not cover damages caused by installation errors like ruined threads etc. Normal craftsmanship is required for installation.

No material failure has been reported so far since the first TwinPegs kit was delivered in 2019, nor any reported damage to rider, rider gear or motorcycle claimed to be caused by TwinPegs.

I would of course appreciate if you, after having gained some experience with TwinPegs, will post a review on www.twinpegs.no Thus not only helping me to be able to develop TwinPegs kits for more motorcycle models, but also helping other fellow enthusiasts to have the same improved ride experience as I am confident that you will have.

I would also appreciate if you post your experiences, pictures and travel stories on the TwinPegs Facebook site, and other relevant places.

Best regards, Kai Ingvald Flateland Inventor/ Designer/ Manager

Product details TwinPegs for BMW R 1300 GS/GSA

R 1200/1250 GS/GSA 2013 and on is an icon of a adventure motorcycle, a global success. That is why the very first commercial TwinPegs kit was launched for this model, back in 2019. This product was sold worldwide for a few years, and these early kits are still in service among GS enthusiasts around the world. As TwinPegs kits for other motorcycle models were designed, and more design experience and racing experience with the newer kits were obtained, it was a natural next step to design a new product from the ground up for the iconic GS, incorporating all accumulated learning. When BMW developed the successor BMW R 1300 GS/GSA, using all design experience and making a TwinPegs kit for that model was a natural next step. And this is the product you are about to install.

The benefits of being able to effortlessly shift weight towards the rear wheel by putting rider weight on the rear footpegs give you a new ride technique tool when climbing, accelerating and when riding in sand or ruts. In addition to this, you have the benefit of saving energy and gaining control. Which in sum equals more fun and gained confidence while riding offroad.

The ergonomics and geometry of TwinPegs is developed via prototypes for enduro racing and rally racing. Just as in 2024, TwinPegs were raced both in Dakar Rally and Africa Eco Race 2025. TwinPegs works!

However, TwinPegs have probably even more to offer to the common adventure rider.

The primary foot pegs are still the primary foot pegs when riding. The pivoting around the ordinary foot peg is shifted up to the ankle joint, when the foot is also resting on the rear footpeg.

The kit does not replace the existing primary foot pegs, it is an addition. The kit consists of brackets, rear foot pegs with return springs, and all attachment hardware. The picture shows TwinPegs installed on a R 1300 GS with height adjustable OEM footpegs. With the primary footpegs in the upper position, as shown on the picture, the standard height kit should be chosen. If you want to use the primary footpegs in the lower position, the lowered kit should be chosen. The only difference is the height of the rear footpeg, that comes with the kit. The kit is compatible with most aftermarket primary foot pegs. If you choose the lowered height kit, aftermarket primary footpegs down to -25 mm can be used. But for my height, 189 cm, the original footpeg height is just fine. Extreme variations of pegs that are both wide, extremely lowered and extremely retracted may be difficult to accommodate standard height rear foot pegs.



The height of the rear foot pegs is adjustable by adding/ removing shims as shown in the picture, so the kit can be configured according to the rider preferences, choice of boots, etc.

Using the grub screws in the rear foot pegs for added grip are optional, according to the rider preferences.
With heel support, softer boots may be used with success for increased comfort. But be aware that more comfortable boots offer less protection.

Space conflict with centre stand

The TwinPegs brackets, the sidestand and the centre stand all compete about the same space.

To be able to offer TwinPegs for BMW R1300 GS/GSA, a design compromise had to be made. The picture shows the centre stand in retracted position, with the forladabe lever arm in" folded in" position. Behind the TwinPegs bracket.

To be able to fold it out, the centre stand must be lowered towards the ground first. The lever is still accessible, you must use it in a slightly different way.

The picture below shows the contact between the lever arm and the TwinPegs bracket. The centre stand doesn't quite get into the parked position, there is contact between the edge of the rear footpeg bolt and the lever. This is not critical. This may be adjusted by some grinding of the bolt edge, and the bracket. The picture also shows the sidestand with a sidestand enlarger. It may be necessary to adjust sidestand enlargers slightly to get the sidestand fully folded in. It is not a problem if the sidestand is resting against the TwinPegs bracket.

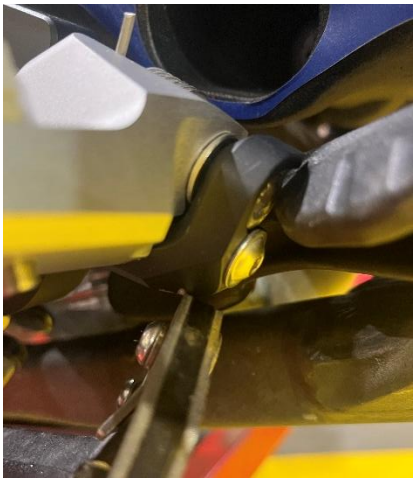

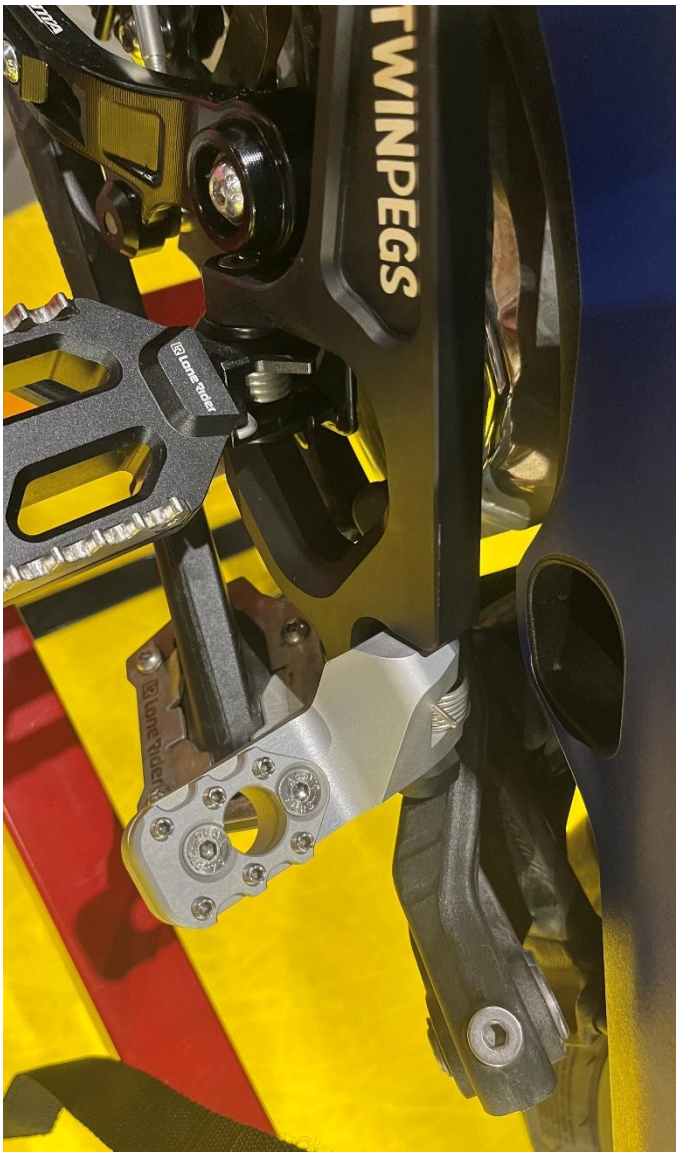

The picture below shows another version of sidestand enlarger. The TwinPegs bracket is designed to allow the sidestand to fold in, but with a sidestand enlarger, the sidestand may not fold fully in. This can be adjusted by adjusting the shape of the sidestand enlarger.



Recommended tools

Socket Torx 30, Allen key 5, 4 and 2.5 mm. A small screwdriver for removing the C-clip that secures the original footpeg bolts. Preferably a torquewrench with torquerange 8 Nm to 17 Nm. Lubrication on the threads is a good idea.

List of components

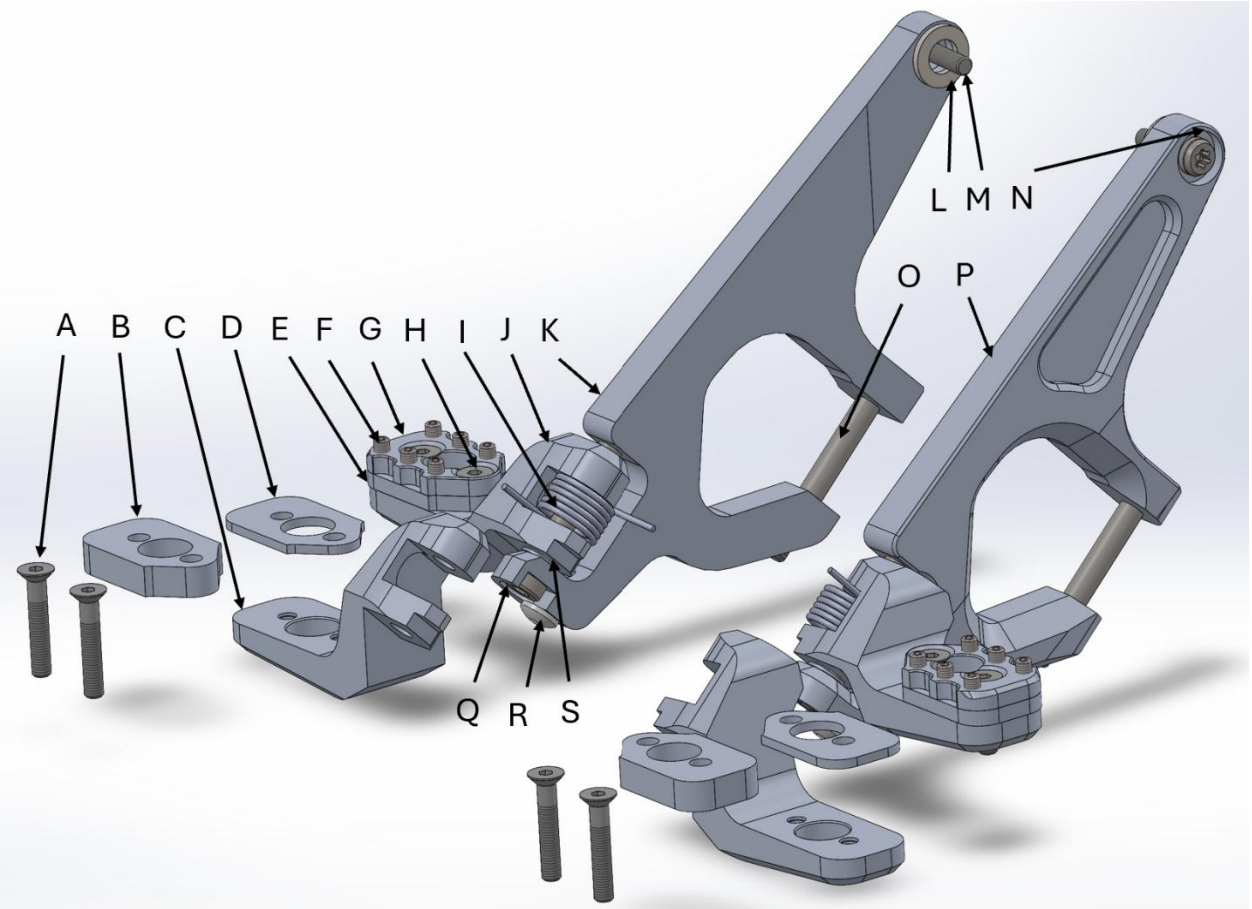

A: M6 x 35 (4 pcs)

B: Shim 10 mm (2 pcs)

C: Optional pair of lowered footpegs, in case the lowered kit is chosen, the rear peg height is the only difference

D: 3 mm shims (2 pcs)

E: 5 mm shims (2pcs)

F: Grub screw M5 x 10 (12 pcs)

G: Footpeg surface (2 pcs)

H: M6 x 25 (4 pcs)

I: Return spring (2 pcs)

J: Footpeg pair, standard height

K: Left bracket

L: M10 flat washer (2 pcs)

M: Original BMW bolts from the kit M6 x 25 (2 pcs)

N: Slotted aluminum washers for bolting the brackets to the frame (4 pcs)

O: Primary footpeg pivot bolts M8 x 65 (2pcs)

P: Right bracket

Q: Rear footpeg pivot bolts M8 x 70 (2pcs)

R: Pivot bolt securing bolt M6 x 10 (2pcs**)**

S: Flat washer M8 (2 pcs)

Step 1 preparations



The original BMW plastic heel guards must be removed on both sides, and the rear upper of the bolt holes for fastening them will be used for fastening the TwinPegs brackets. The other bolts for fastening the plastic heel guards may be installed in the threaded holes after the plastic heel guards have been removed, to plug the threaded holes.

Start by temporarily removing the primary footpegs. Pay attention to how the return springs are attached to the bike, so you get it back in the same position. The original footpeg bolts will be replaced by bolts in the kit.

The shift lever must also be removed temporarily, as it blocks the way for installing the new footpeg pivot bolt

The picture in “List of components” shows the assembly of all parts listed in the parts list. If a lowered kit is chosen, the kit will contain rear footpegs (**C**).

Step 2 Build right and left bracket footpeg assembly (Bracket + rear footpeg)

It is beneficial to preassemble the left and right footpeg assemblies before installing them on the bike**. Important: The flat washer (S) should be below the rear footpeg, separating the rear footpeg from the bracket. The air gap between the bracket and the top of the footpeg is intended.**

Make sure that the return springs (**I**) are installed like in the picture, squeeze them into position with your thumb with both ends engaging footpeg/ bracket edge, while pushing in the bolt (**Q**). Bolt (**Q**) torque is 17 Nm. Loctite if you want, but it makes disassembly harder.

There have not been reported problems with dropped bolts. There is extra security in the design for preventing dropping bolts, the safety lock bolts (**R**). Don't forget to install these. No need for Loctite, the thread profile in these M6 holes is of self-lock type.

Adjustment of rear footpeg height must be done according to rider preferences until "sweet spot" of support and freedom is achieved. The ideal adjustment will be different for different riders. For a low stack of shims use screws (**H**). For a tall stack of shims use screws (**A**).

Important note about adjustment! : Always loosen the grub screws (F) before the two countersunk M6 screws (A or H), as the grub screws pretension the screws (A or H)

Start with 5 mm shim as base setting. It is better to start low, and increase height if that feels right, than start high and get a "this is awkward"-feeling. If the rear footpegs feel intrusive, they are too high. If you must drop your heel uncomfortably low to find them, they are too low. Somewhere in between of these two extremes, most riders will be able to find a "sweet spot" where they after some time to get used to the new ergonomics, benefit significantly from having TwinPegs installed.

Step 3 Install left side bracket

Use one of the two BMW M6 x 25 bolts (**M**) supplied with the kit for attaching the left TwinPegs assembly to the frame, via a slotted "washer" (**N**). Don't forget to place a flat washer (**L**) between the bracket (**K**) and the frame. Do not tighten the bolts yet, install them loose.

Bolt (O) shall be used to replace the original footpeg bolt and secure the bracket assembly to the bike. Pay attention when installing the return spring, to get the end of the spring in the correct place in the frame. Tighten the bolt up to approximately 10 Nm. Pay attention to the movement of the primary footpeg. Excessive tightening of this bolt will put excess strain on the footpeg bracket, and lead to poor performance of the footpeg fold back function. If it happens, back off the torque a little, until the footpeg moves freely again.

Bolt (**M**) should be tightened to 8 Nm according to BMW specifications.

Reinstall the gear shifter. Loctite 243 may be used on the gear shifter pivot bolt.

Step 4 Install right side bracket

Same procedure as on left side.

Important note about adjustment of rear footpeg height!

Always loosen the six small M5 x 10 grub screws (**F**) before attempting to loosen the two M6 screws (**A or H**) that secure the footpeg surface and shims stack! These grub screws are pretensioning the two M6 bolts, preventing them from coming loose.

When satisfied with the adjustment, it is advised to secure these grub screws with Loctite 243.

The purpose of the grub screws is to increase safety during offroad riding. Using them are of course not mandatory.

Have fun and stay safe! And when appropriate; Ride faster further!